DETERMINATION OF TEMPERATURE DEPENDENT STABLE STRONTIUM ISOTOPE (^{88}SR/^{86}SR) FRACTIONATION VIA BRACKETING STANDARD MC-ICP-MS

J. Fietzke & A. Eisenhauer

Leibniz-Institut für Meereswissenschaften (IfM-GEOMAR), FB2 Biogeochemie, Wischhofstr. 1-3, 24148 Kiel, Germany.

Corresponding author: jfietzke@ifm-geomar.de

Published in Geochemistry Geophysics Geosystems, 2006, doi.10.1029/2006GC001243.

Abstract

Stable strontium isotopes (here $^{88}Sr/^{86}Sr$) are introduced as a new member of the non-traditional stable isotopes. We have developed a bracketing standard method for the determination of $\delta^{88/86}Sr$ using an ***AXIOM*** MC-ICP-MS and normalizing to strontium SRM NBS987. For individual measurements the external reproducibility is better than about 25 ppm (1σ RSD).

For the IAPSO seawater standard a $\delta^{88/86}Sr$ value of 0. 381 ± 0.010 ‰ (2SEM) was determined. For the first time a temperature dependent strontium isotope fractionation during calcium carbonate precipitation could be shown. Aragonite samples inorganically precipitated under temperature control between 10 and 50 °C revealed a $\delta^{88/86}Sr$/temperature dependency of 0.0054(5) ‰/°C (R^2 = 0.987). In contrast, for natural coral samples (Pavona Clavus) from a proxy calibration study (23 to 27 °C) we did determine 0.033(5) ‰/°C (R^2 = 0.955). The processes causing this 6 fold stronger temperature dependency for the natural coral samples have to be studied in more detail in future studies. In a first approach the different slopes can be interpreted as effects of kinetic fractionation of strontium ions with or without a hydrate shell of 22 to 29 water molecules.

Keywords

stable strontium isotopes, isotope fractionation, non-traditional stable isotopes, divalent cations, MC-ICP-MS

Introduction

Non-traditional stable isotopes have developed over the last years into one of the most active fields of isotope geochemistry [Halliday et al. 1998]. In the field of low temperature geochemistry several studies focused on divalent cations like Ca^{2+} and Mg^{2+} [Nägler et al. 2000, Galy et al. 2002, Gussone et al. 2003, Hippler et al. 2006]. Calcium isotope fractionation in calcium carbonates was shown to be temperature dependent [Nägler et al. 2000]. The physico-chemical processes causing isotope fractionation during inorganic and biogenically mediated precipitation of calcium carbonate polymorphs are still under debate. In this regard the role of divalent cation aquocomplexes and their mass play a major role [Richter et al. 2006]. Thus, the behavior of other divalent cations during biomineralization could contribute to a consistent model of isotope fractionation processes.

Following this approach we have developed a method to determine the fractionation of stable strontium isotopes. The radiogenic strontium isotope system ($^{87}Sr/^{86}Sr$ or $\varepsilon^{87/86}Sr$) is a well established tool in isotope geochemistry. It is mostly used in provenance studies in order to reconstruct the igneous origin of minerals and rocks and in combination with ^{87}Rb, the radioactive mother of ^{87}Sr, as a dating tool. For this applications $^{88}Sr/^{86}Sr$ is taken as a constant and its value is applied as internal normalization ratio to correct for instrumental mass fractionation, thereby erasing any signature of natural mass dependent Sr isotope fractionation.

Here we present a method for the determination of $^{88}Sr/^{86}Sr$ values in geological samples to study the variability of this stable isotope system in nature. To be consistent with existing notations e.g. for calcium isotopes [Eisenhauer et al. 2004] we express our results using the well known δ-notation normalizing to the strontium SRM NBS987:

$$\delta^{88/86}Sr = \left(\frac{^{88/86}Sr_{sample}}{^{88/86}Sr_{NBS987}} \right) * 1000 - 1000$$

Note, given the fact that the $^{88}Sr/^{86}Sr$ ratio is not constant but variable in natural samples it might be argued that $\varepsilon^{87/86}Sr$ values based on the constancy of $^{88}Sr/^{86}Sr$ are not valid anymore. However, this could only be true if the fractionation during natural processes and mass spectrometric measurement follow different systematic. Detailed considerations concerning this topic will be published elsewhere.

Experimental

Instrumentation

In this study we used a MC-ICP-MS (***AXIOM***, originally designed and manufactured by VG Elemental, Winsford, UK; now ThermoFinnigan, Bremen, Germany), a double focussing magnetic sector field instrument equipped with 10 Faraday Cups and 3 ion counters. Samples solutions (5% nitric acid) were introduced through a microconcentric glass nebulizer (GlassExpansion ***MicroMist100***). The sample aerosol was dried using a peltier-cooled desolvator (ESI ***APEX***) coupled with a membrane desolvator (Cetac ***ARIDUS***). This combined desolvation device provided an excellent stable sample introduction. R.A.Chilton cones RAC19 and RAC705 were used throughout the whole study. The typical system parameters are listed in Table 1.

Measurement systematic

Although we are interested in the $^{88}Sr/^{86}Sr$ ratio only, all four naturally occurring Sr isotopes are measured due to two reasons. First, it gives a better control to changing mass fractionation and second, we can use the data for radiogenic strontium isotope studies ($\varepsilon^{87}Sr$) as well. For the latter it is also necessary to control the Rb contributions on masses 85 and 87 to correct the ^{87}Sr data. The cup configuration is shown in fig 1. Analytical baselines were determined as on-top-zeros to account for the cup baseline, the Sr and Rb blanks in the 5% nitric acid and for the Kr background from the Ar supply. The latter was found to be stable enough to not influence the Sr measurements (typical ^{86}Kr signal: 0.05 mV (± 5 %) or 3000 ± 150 cps). Potentially occurring interferences were investigated using

the AXIOM in high resolution mode (5000Res). No additional interferences (such as e.g. molecular, oxides or doubly charged ions) could be detected so far.

We apply a bracketing standard approach using strontium SRM NBS987. Standards and samples are prepared as 50ppb Sr solutions in 5% nitric acid. As for other bracketing standard methods it is important to use the same acid stock to prepare all the sample and standard solutions and solutions to be used as wash solution as well as for the baseline determination.

The beam intensities for 50ppb Sr solutions were typically about 7 to 8 V (^{88}Sr) and 0.8 to 0.9 V (^{86}Sr), respectively.

The data acquisition was carried out in alternating 15 minute runs for sample and standard each run containing 300 scans with an integration time of 3 seconds.

Wash out times were found to be short. The signal dropped below 1 ‰ of its in run intensity within less than a minute. This allows rapid changes between sample and standard solutions, required for the bracketing standard technique.

In a first reproducibility test the strontium SRM NBS987 was measured non-stop for 16 hours (120 data points; 8 minutes each) and normalised to itself (neighbouring standard measurements) (fig. 2). The variation of the data (internal reproducibility: 24 ppm (1σ RSD)) did not change during the whole 16 hours of data acquisition indicating the stability of the measurement conditions.

The influence of differing concentrations between sample and standard was tested using different dilutions of the same coral sample. The 50ppb NBS987 standard solution was not changed and was measured with an ^{88}Sr beam intensity of about 7 V. The ^{88}Sr beam intensities of the sample solutions were 3.5 V, 6 V and 7 V (corresponding to about 25ppb, 40ppb and 50ppb Sr concentration), respectively. The $\delta^{88/86}$Sr results of this 3 differently concentrated sample solutions (tab. 2) agree within 4 ppm (RSD) showing the robustness of this bracketing standard method. An exact concentration matching between standard and

sample is not critical if constant measurement conditions can be provide and analytical baselines are precisely determined.

Chemical treatment of natural samples

Sr was extracted from the sample matrix of natural samples by ionchromatography using 300µl Eichrom SrSpec resin as described below.

All samples were weighted in a Teflon beaker, carbonates were dissolved using 4N HNO_3, evaporated to dryness, redissolved in 1ml 4N HNO_3 and finally loaded onto a column with 300 µl Eichrom SrSpec resin. The sample matrix was separated by washing the column with 4ml 4N HNO_3. The strontium was eluted with 1ml ultrapure water (18.2 MΩ). Solutions for MC-ICP-MS (50ppb Sr) were prepared using 5 % nitric acid.

IAPSO seawater standard results

To check the robustness of the method for natural samples that need chemical purification of Sr, five replicates of IAPSO seawater standard were separately passed through the above described column chemistry and measured. This standard (distributed by the International Association for the Physical Sciences of the Oceans) was used because it is one of the matrix standards usually taken for Ca isotope measurements (even if certified only as a salinity standard) [Hippler et al. 2003]. Prepared from natural seawater it is used in this study to represent the stable Sr isotope composition of seawater. Future studies will investigate possible variability of stable Sr on a global oceanic scale.

The results (fig. 3) of all five replicates (each one measured up to 5 times) do agree within 20ppm (RSD). From this data set the $\delta^{88/86}$Sr of IAPSO relative to NBS987 was determined to $\delta^{88/86}$Sr(IAPSO) = 0.381 ± 0.010 ‰ (2SEM = 2σ error of the mean). This

value is of particular interest because it defines the composition of the ”bulk solution” from which the precipitation of marine biominerals occurs.

Temperature dependent stable strontium isotope fractionation in carbonates

The impetus for this study was the previously observed temperature dependence of calcium isotope fractionation during inorganic and biologically mediated calcium carbonate precipitation [Nägler et al. 2000, Gussone et al. 2003]. A major result of previous studies was the observation of to distinct fractionation trends for calcium. The strong temperature dependence was interpreted as kinetic fractionation of pure calcium ions whereas the much weaker trend as kinetic fractionation of a heavy calcium aquocomplex (one calcium ion plus 25 to 33 water molecules). The importance of hydrate shells for kinetic isotope fractionation was discussed in detail in a recent publication [Richter et al. 2006]. One way to study the role of such aquocomplexes during calcium carbonate precipitation is the measurement of other divalent cations like Sr^{2+}. The hydration number (number of water molecules in the hydrate shell) is supposed to depend on the ion potential (Z/r; Z – charge of the ion, r – ion radius). Considering the lower ion potential of Sr^{2+} compared to Ca^{2+} one can expect a lower hydration number for strontium. The higher mass of strontium should cause a smaller kinetic isotope fractionation for the dehydrated ion.

Following this two different sample sets were chosen for a first study (a) inorganically precipitated aragonite prepared under temperature control between 10 and 50 °C and (b) natural coral samples (Pavona clavus; aragonite) from a proxy calibration study [Wellington et al. 1996] with logged temperatures in the range between 23 and 27 °C.

The measurements were repeated 5 to 10 times for each sample resulting in precisions of 12 to 33 ppm (2SEM) and external reproducibilities of 12 to 37 ppm (1σ RSD). Both data sets clearly show a well defined temperature dependent fractionation of stable strontium

isotopes (fig. 4). The slope for the inorganically precipitated (0.0054 ± 0.0005 ‰/°C (R^2 = 0.987)) is smaller than the slope of the natural coral samples (0.033 ± 0.005 ‰/°C (R^2 = 0.955)).

As previously stated for calcium isotopes two different temperature slopes were found too by various authors [Nägler et al. 2000, Gussone et al. 2003]. This observation was interpreted as the difference in kinetic fractionation of calcium isotopes with or without their hydrate shell, respectively, causing an about 15 times stronger fractionation for the bare calcium ion than for the hydrated one. If we assume a similar behavior for strontium isotopes, we can calculate from the ratio of both slopes the number of water molecules in the hydrate shell of a strontium ion to be 22...29 (during inorganic aragonite precipitation). Compared to calcium (25...33 water molecules within the aquocomplex) this slightly smaller value can be understood as a consequence of the different ion radii of calcium (0.99A) and strontium (1.13A) and, thus, differing ionic potentials as explained above.

The isotope fractionation is inversely correlated to the ion mass in a kinetic fractionation process. Thus, we relate the fractionation to the ***r***elative ***m***ass ***d***ifference (***rmd***) of the isotopes involved. For calcium (^{40}Ca and ^{44}Ca) the ***rmd*** is 10 % and for strontium (^{86}Sr and ^{88}Sr) 2.3 %. If we calculate the fractionation (‰/°C) per recent ***rmd*** we get 0.024 ‰/°C/%(*rmd*) for calcium and 0.014 ‰/°C/%(*rmd*) for strontium. Considering the still large uncertainties of the slope values this result agrees with the following interpretation. For the about twice as heavy strontium ions we expected half of the fractionation per percent ***rmd*** than for the calcium ions. From these considerations the aquocomplex hypothesis holds for calcium and strontium isotopes and can be understood as a consequence of kinetic isotope fractionation.

Conclusion

The here presented bracketing standard method provides the opportunity to study natural variations of the isotope ratio $^{88}Sr/^{86}Sr$, until now considered to be undetectable, with ppm precisions. It is a valuable tool to study fractionation processes during calcium carbonate precipitation but opens a much broader field of new applications. It will be used as a paleothermometer, for the identification of different fluid sources involved in calcium carbonate precipitation at cold vents and to study the processes of biomineralization in general. Combined with the radiogenic $\varepsilon^{87}Sr$ the $\delta^{88/86}Sr$ signature of water masses will provide additional knowledge about ocean circulation.

Acknowledgements

We thank Adina Paytan and Martin Dietzel for providing and Nikolaus Gussone for preparing sample material. Volker Liebetrau is gratefully acknowledged for fruitful discussions. A special thank goes to Dieter Buhl for sharing his experiences with the APEX/ARIDUS combination. This study was funded by DFG grant Ei272/15-1 “SENECA”. Last but not least we like to say “Thank you” to two anonymous reviewers for providing fair, detailed and constructive comments that helped to improve the paper.

References

Halliday A.N., D.C. Lee, J.N. Christensen, M. Rehkämper, W.Y.X. Luo, C.M. Hall, C.J. Ballentine, T. Pettke and C. Stirling (1998), Applications of multiple collector-ICPMS to cosmochemistry, geochemistry, and paleoceanography. *GCA*, *62* (6), 919-940.

Nägler T.F., A. Eisenhauer, A. Müller, C. Hemleben and J. Kramers (2000), The δ^{44}Ca-temperature calibration on fossil and cultured Globigineridoides sacculifer: New tool for reconstruction of past sea surface temperatures. *G*^{3}, *1*, (2000GC000091).

Galy A., M. Bar-Matthews, L. Halicz, R.K. O´Nions (2002), Mg isotopic composition of carbonate: insight from speleothem formation. *EPSL 201* (1), 105-115.

Gussone N., A. Eisenhauer, A. Heuser, M. Dietzel, B. Bock, F. Böhm, H.J. Spero, J. Bijma and W.C. Dullo (2003), Model for kinetic effects on calcium isotope fractionation (δ^{44}Ca) in inorganic aragonite and cultured planktonic foraminifera. *GCA*, *67* (7), 1375-1382.

Hippler D., A.D. Schmitt, N. Gussone, A. Heuser, P. Stille, A. Eisenhauer, T.F. Nägler (2003), Calcium isotopic composition of various reference materials and seawater. *Geostandards Newsletter*, *27* (1), 13-19.

Hippler D., A.Eisenhauer, T.F. Nägler (2006), Tropical Atlantic SST history inferred from Ca isotope thermometry over the last 140ka. *GCA 70* (1), 90-100.

Eisenhauer A., T.F. Nägler, P. Stille, J. Kramers, N. Gussone, B. Bock, J. Fietzke, D. Hippler and A.-D. Schmitt (2004), Proposal for International Agreement on Ca Notation Resulting from Discussion at Workshops on Stable Isotope Measurements Held in Davos (Goldschmidt 2002) and Nice (EGS-AGU-EUG 2003), *Geostandards and Geoanalytical Research, 28* (1), 149-151.

Richter F.M., R.A. Mendybaev, J.N. Christensen, I.D. Hutcheon, R.W. Williams, N.C. Sturchio, A.D. Beloso (2006), Kinetic isotopic fractionation during diffusion of ionic species in water. *GCA 70* (2), 277-289.

Wellington G.M., R.B. Dunbar and G. Merlen (1996), Calibration of stable oxygen isotope signatures in Galapagos corals. *Paleoceanography, 11* (4), 467-480.

Tables

Table 1: Operating parameters for MC-ICP-MS ***AXIOM***, ESI ***APEX*** and Cetac ***ARIDUS***.

Gases (l/min)	Cool	14.0
	Aux	1.8
	Neb	0.65
	Sweep	3.2...3.6
	Nitrogen	0
APEX temp. (°C)	Spraychamber	140
	Peltier-cooler	5
ARIDUS temp.(°C)	Spraychamber	100
	Membrane	160
Torch Setting	X	-108
	Y	70
	Z	50
Potential (V)	Acc. Voltage	4970
	Transfer 1	2780
	Transfer 2	2950
	X Deflect 1	-40
	Y Deflect 1	-45
	X Lens	-2350
	Rotate	0
	Curve	0
	X Deflect 2	-2
	Y Deflect 2	-4
	Y Deflect 3	0
RF Power (W)	Ignite	1200
	Shield Out	1250

Resolution (m/Δm)		520

Table 2: Test of the influence of differing sample concentrations (beam intensities) on the $\delta^{88/86}$Sr measurements determined versus the same 50ppb NBS987 standard solution (measured with 7 V on ^{88}Sr)

^{88}Sr intensity of the sample in V (*conc. in ppb*)	**$\delta^{88/86}$Sr rel. NBS987 (7 V on ^{88}Sr) in ‰ (± 2SEM)**
3.5 (*25*)	0.104 ± 0.012
6 (*40*)	0.103 ± 0.004
7 (*50*)	0.110 ± 0.008

Figure captions

Fig.1: Cup configuration for the stable strontium measurements. L refers to low mass Faraday cups, H to high mass faraday cups and Ax to the axial cup. The isotopes relevant for stable Sr analysis are highlighted. Isobaric interferences from Kr and Rb are shown as well. Of these interferences only ^{86}Kr does effect the measurements of stable Sr isotopes. Its contribution can be determined measuring on top zero baselines.

Fig.2: Results of a non-stop16-hour measurement of strontium SRM987 (8 minutes per run) normalised to itself.

Fig.3: $\delta^{88/86}$Sr data of five replicates of seawater standard IAPSO. Each replicate sample (different symbols in the plot) was separately prepared (ionchromatography) and measured up to 5 times. The variation of all different measurements is 24 ppm (1σ RSD). The mean $\delta^{88/86}$Sr for IAPSO relative to NBS987 was estimated to 0.381 ± 0.010 ‰ (2SEM).

Fig.4: $\delta^{88/86}$Sr vs. temperature data of inorganically precipitated aragonite and natural coral (Pavona Clavus) samples. For comparison the $\delta^{88/86}$Sr value of IAPSO seawater standard (0.381 ± 0.010 ‰ (2SEM)) is plotted as temperature independent level.

Figures

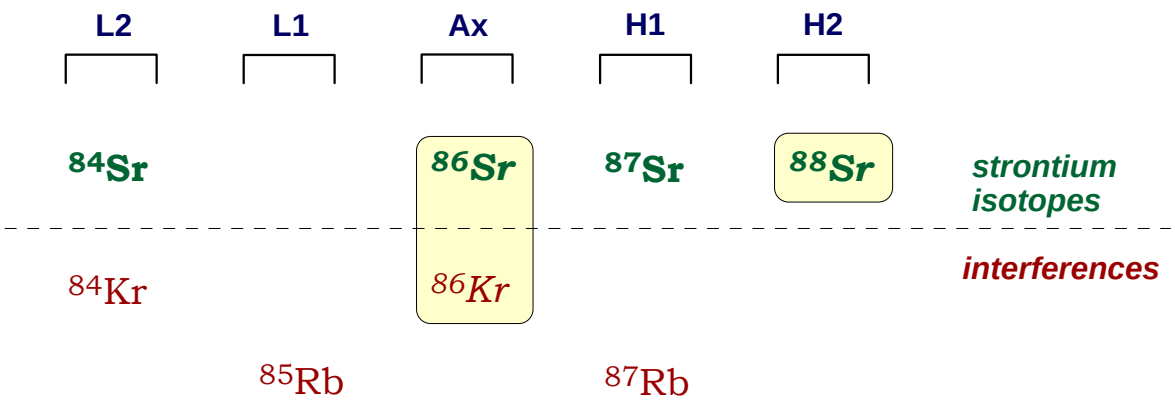

Fig. 1

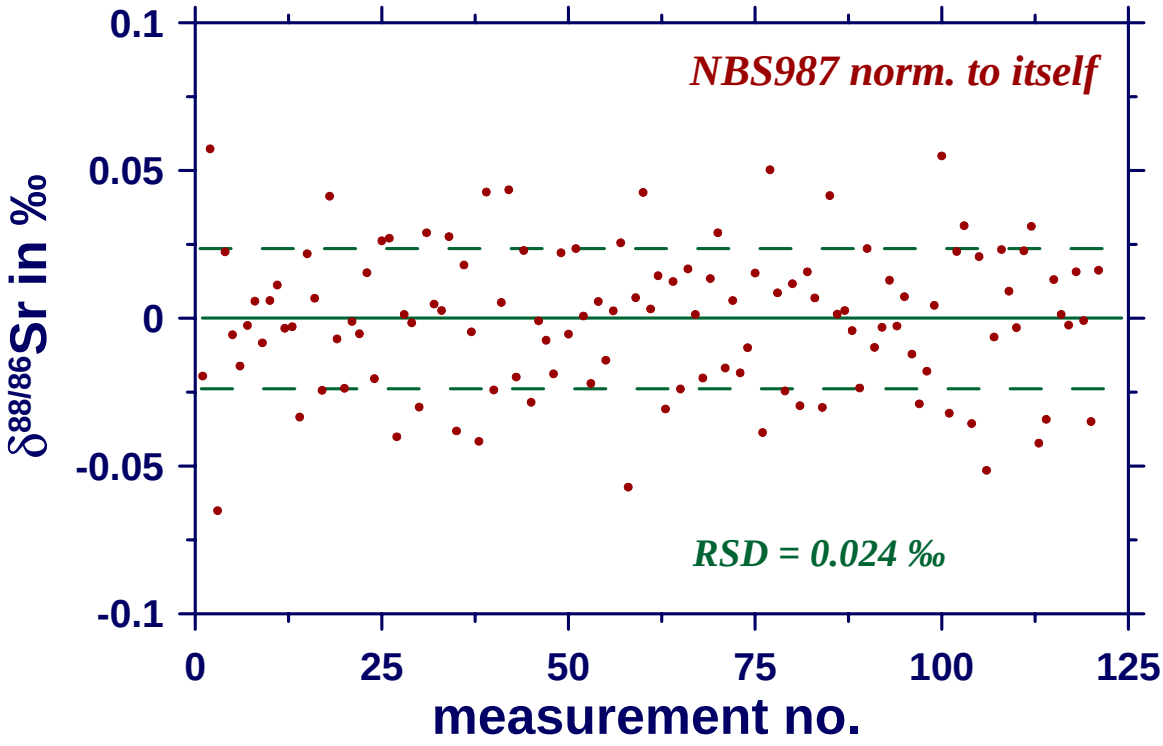
NBS987 norm. to itself
RSD = 0.024 ‰
0.1
0.05
0
-0.05
-0.1
0
25
50
75
100
125
measurement no.
δ88/86Sr in ‰

Fig. 2

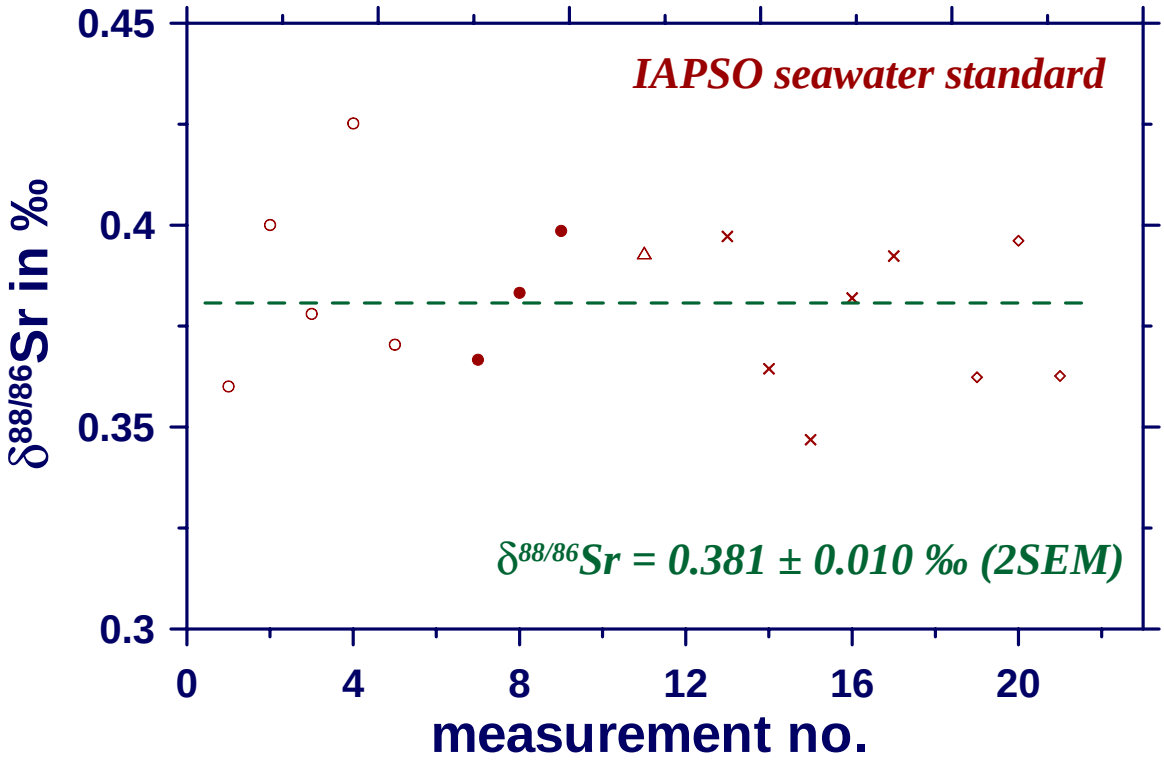
IAPSO seawater standard
δ88/86Sr = 0.381 ± 0.010 ‰ (2SEM)
δ88/86Sr in ‰
0.45
0.4
0.35
0.3
0
4
8
12
16
20
measurement no.

Fig. 3

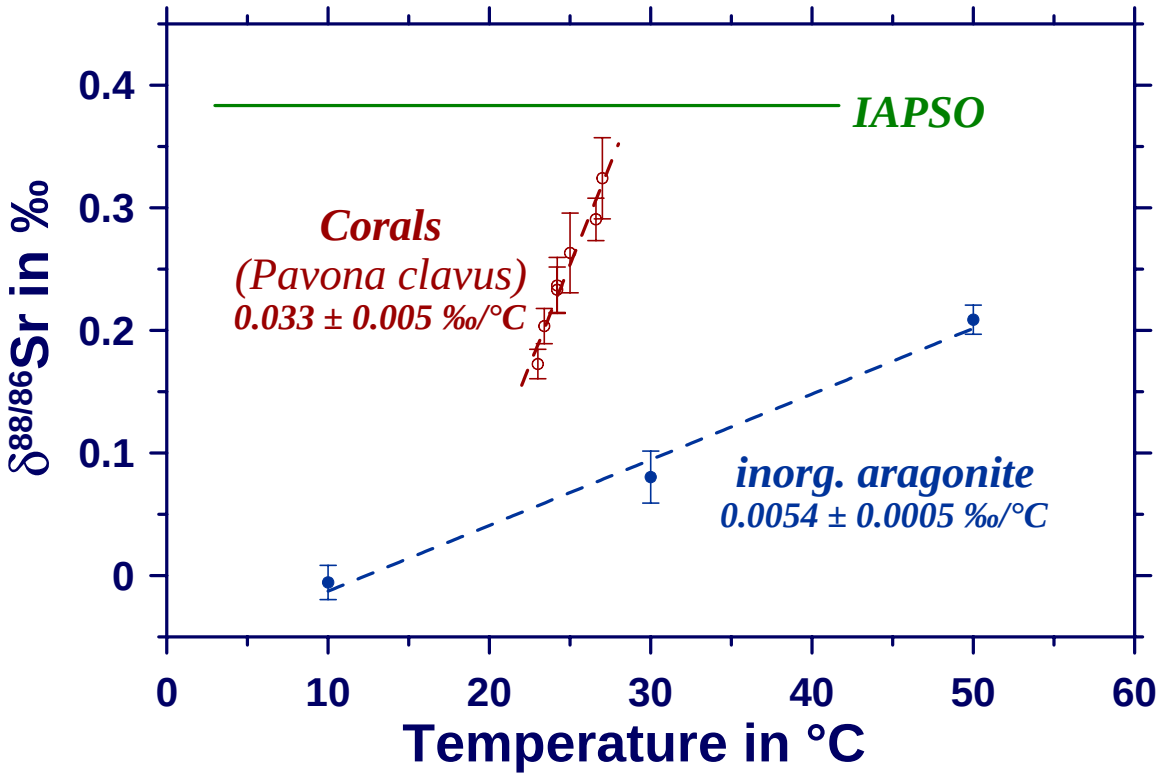
IAPSO
Corals
(Pavona clavus)
0.033 ± 0.005 ‰/°C
inorg. aragonite
0.0054 ± 0.0005 ‰/°C
δ88/86Sr in ‰
Temperature in °C
0.4
0.3
0.2
0.1
0
0
10
20
30
40
50
60

Fig. 4